**CLARK PACIFIC**

1980 SOUTH RIVER ROAD
W SACRAMENTO, CA 95691
TEL: (916) 371-0305
FAX: (916) 372-0323

13592 SLOVER AVENUE
FONTANA, CA 92337
TEL: (909) 823-1433
FAX: (909) 823-1361

| | |
|---|---|
| PROJECT | JOB |
| CONTRACTOR | SHEET PCC-SK2 |
| TYPICAL BEARING DETAIL | DATE 3/15/07 |
| | BY TA / CHECK DW |

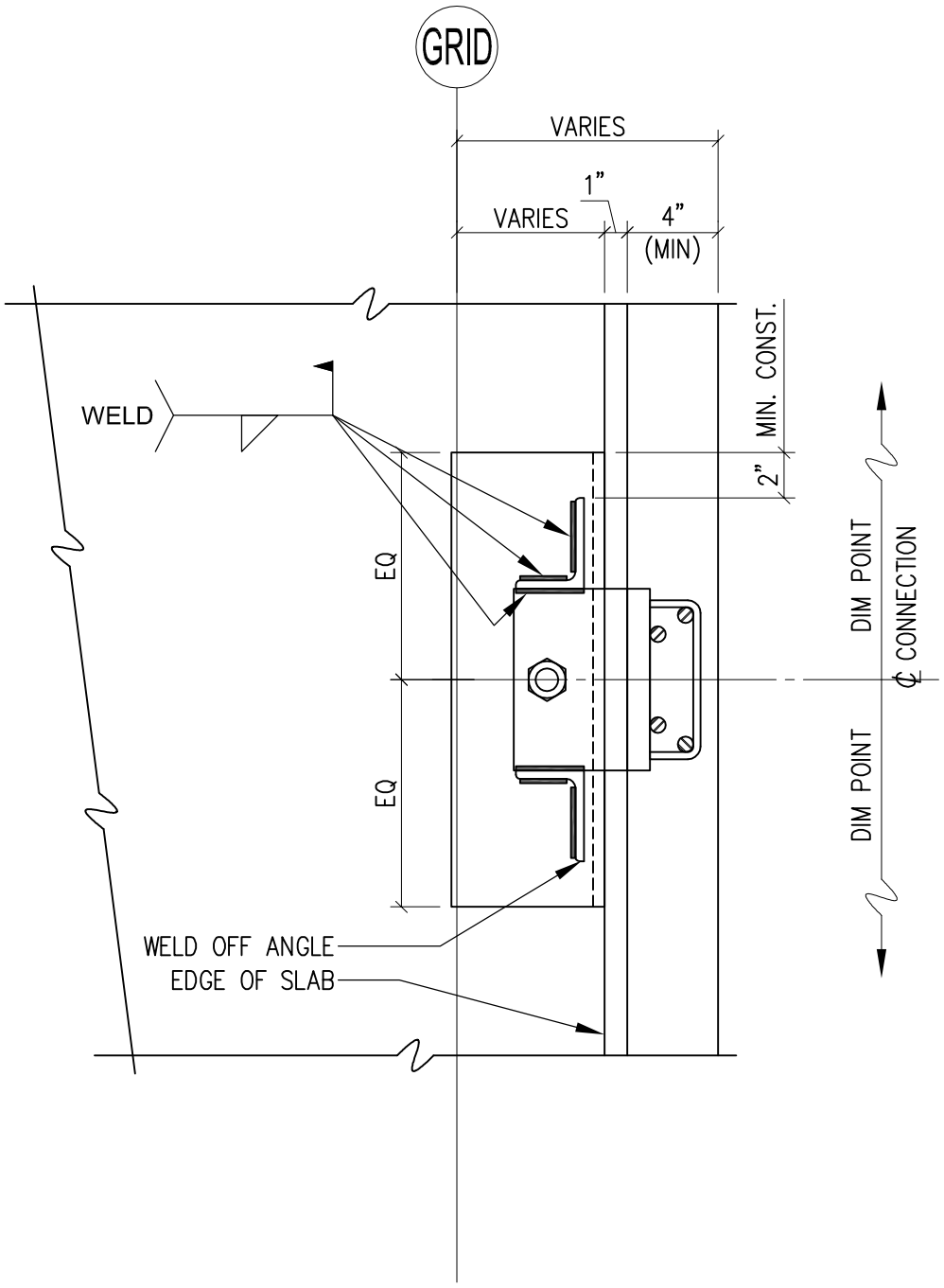


# SK2 TYPICAL BEARING CONNECTION

SCALE: 1 1/2" = 1'-0"

S:\By Employee\tony arroyo\WEBSITE.dwg, 3/19/2007 2:03:44 PM